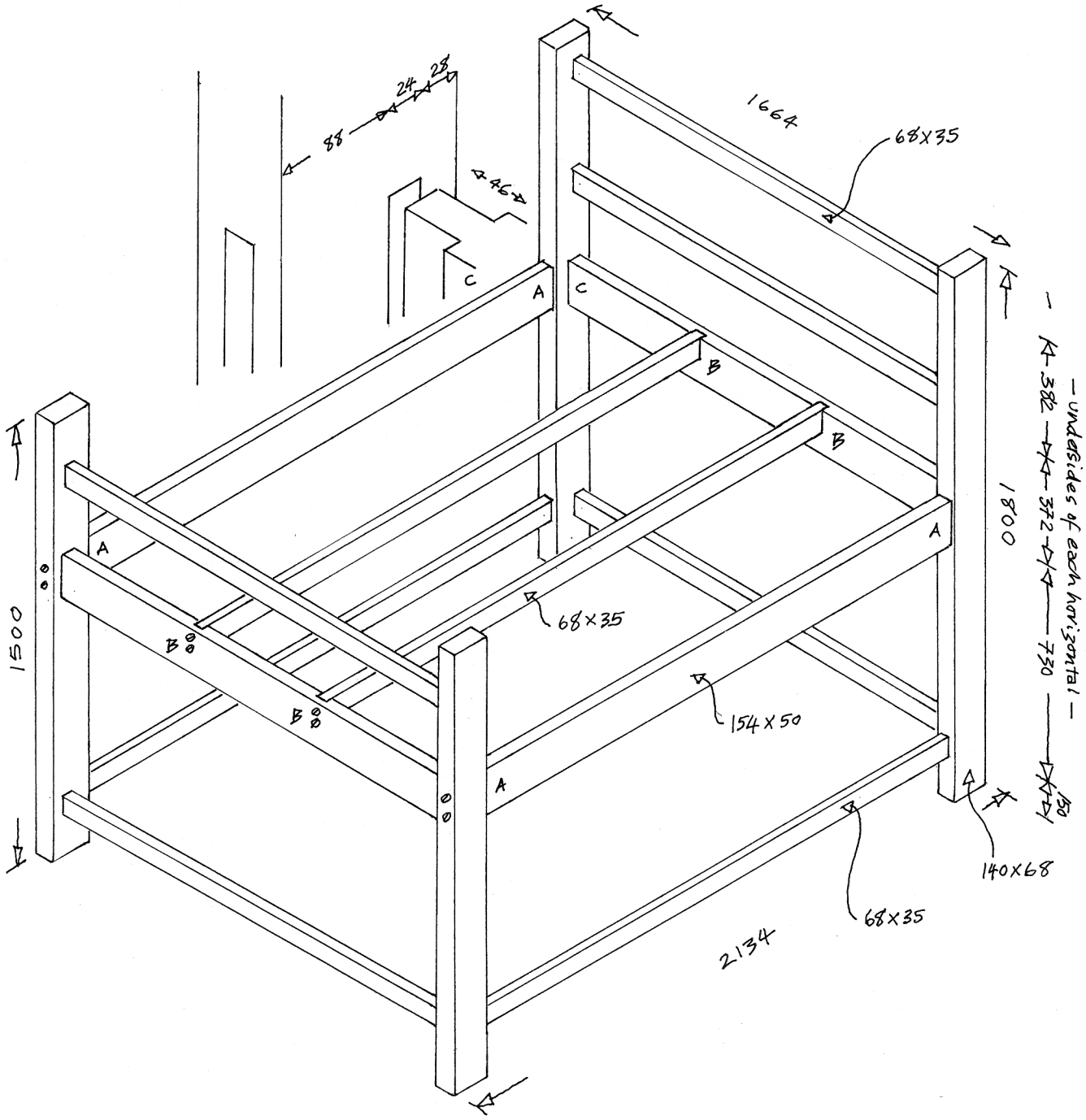

new improved platform bed design

scale 1:15 & 1:3

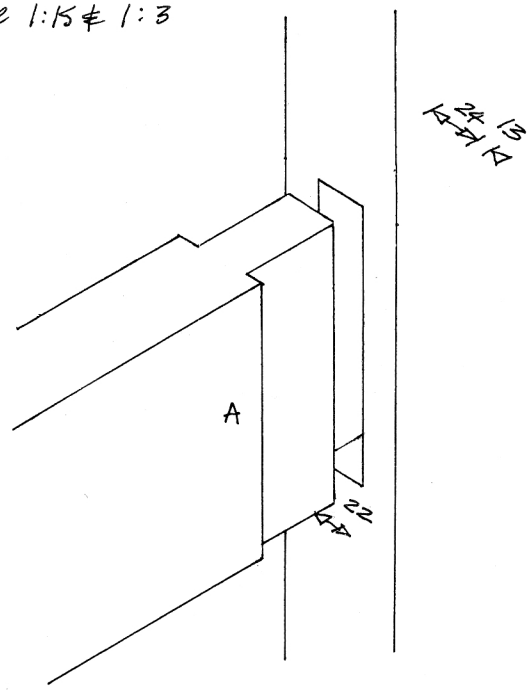

all but the A & B joints are simply pegged into place with 8mm dowel

(A) has 2 × 150mm/6mm screws. Difficult to drill out straight. Also use a 5mm bit first, right through both pieces, then finish with a 6mm bit on the upright to ensure when you tighten screw it pulls the horizontal in.

(B) has 2 × 100 mm/6 mm screws. Same procedure as (A) applies for drilling out holes first

Phil Rooksby 28.02.2011